# PSU R210
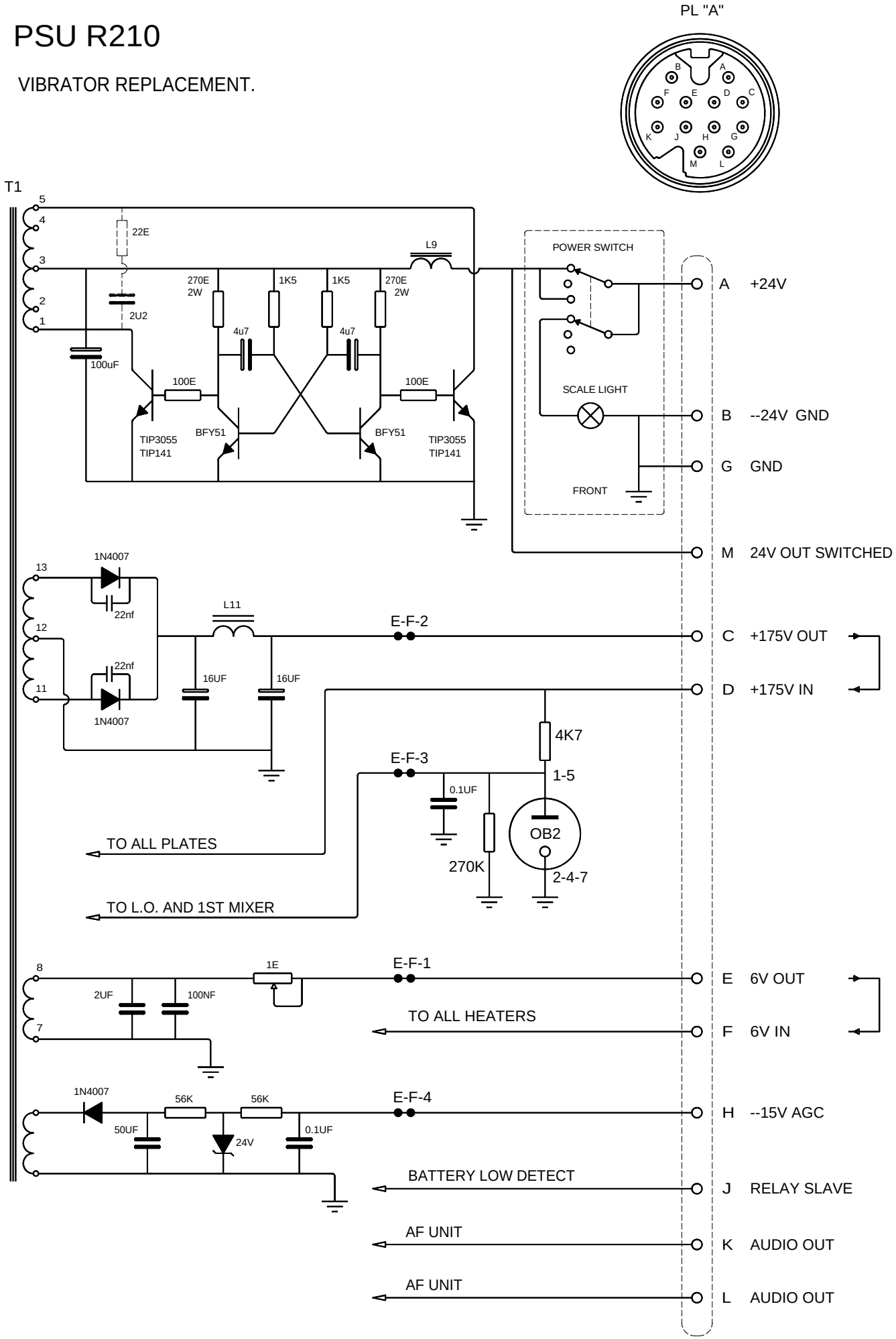
VIBRATOR REPLACEMENT.